SERVICE MANUAL

Hydraulic Brakes type LB/288…, LBS[V]/289 and LBS[V]/290 - series 4

Euro and SAE versions

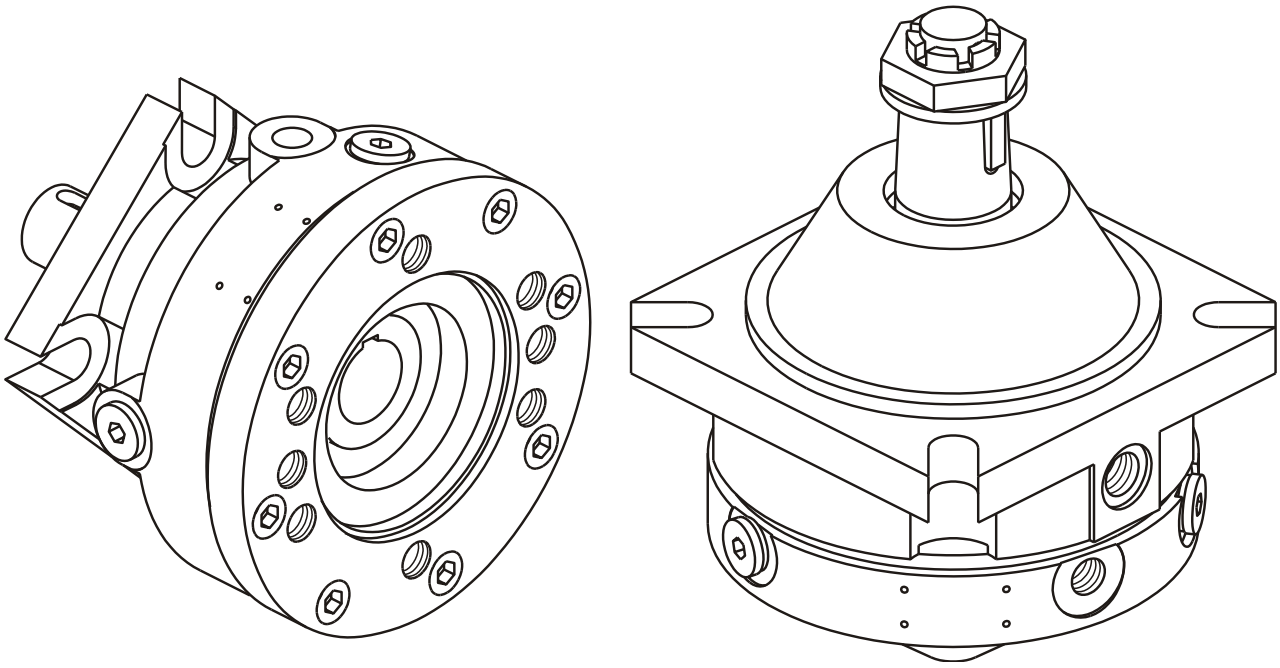

2008

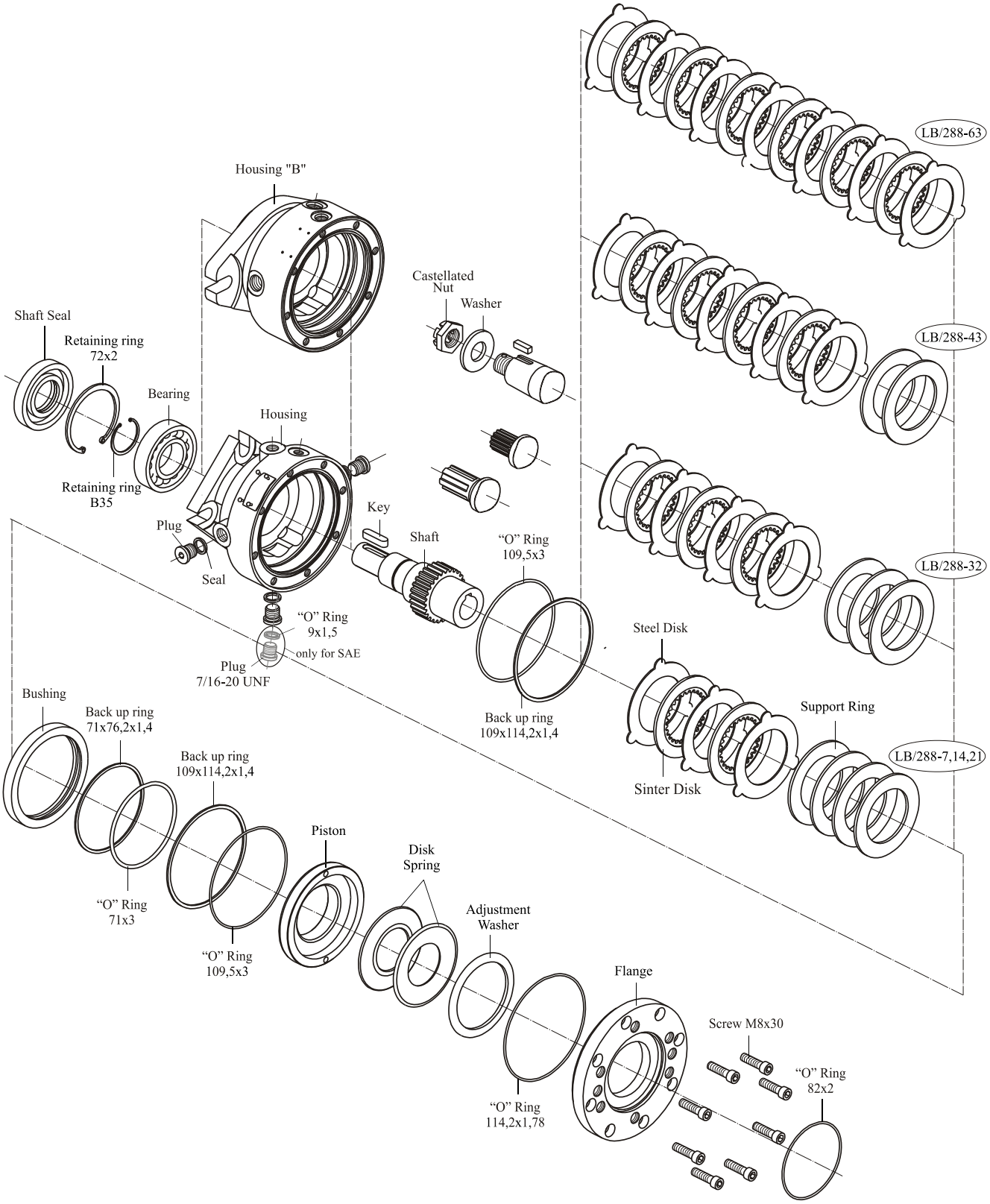
LB/288-63
Housing "B"
Castellated Nut
Washer
Shaft Seal
Retaining ring 72x2
LB/288-43
Bearing
Housing
Retaining ring B35
Key
Plug
Shaft
"O" Ring 109,5x3
Seal
LB/288-32
"O" Ring 9x1,5
only for SAE
Plug 7/16-20 UNF
Steel Disk
Bushing
Back up ring 71x76,2x1,4
Back up ring 109x114,2x1,4
Support Ring
LB/288-7,14,21
Back up ring 109x114,2x1,4
Sinter Disk
Piston
Disk Spring
"O" Ring 71x3
Adjustment Washer
"O" Ring 109,5x3
Flange
Screw M8x30
"O" Ring 82x2
"O" Ring 114,2x1,78

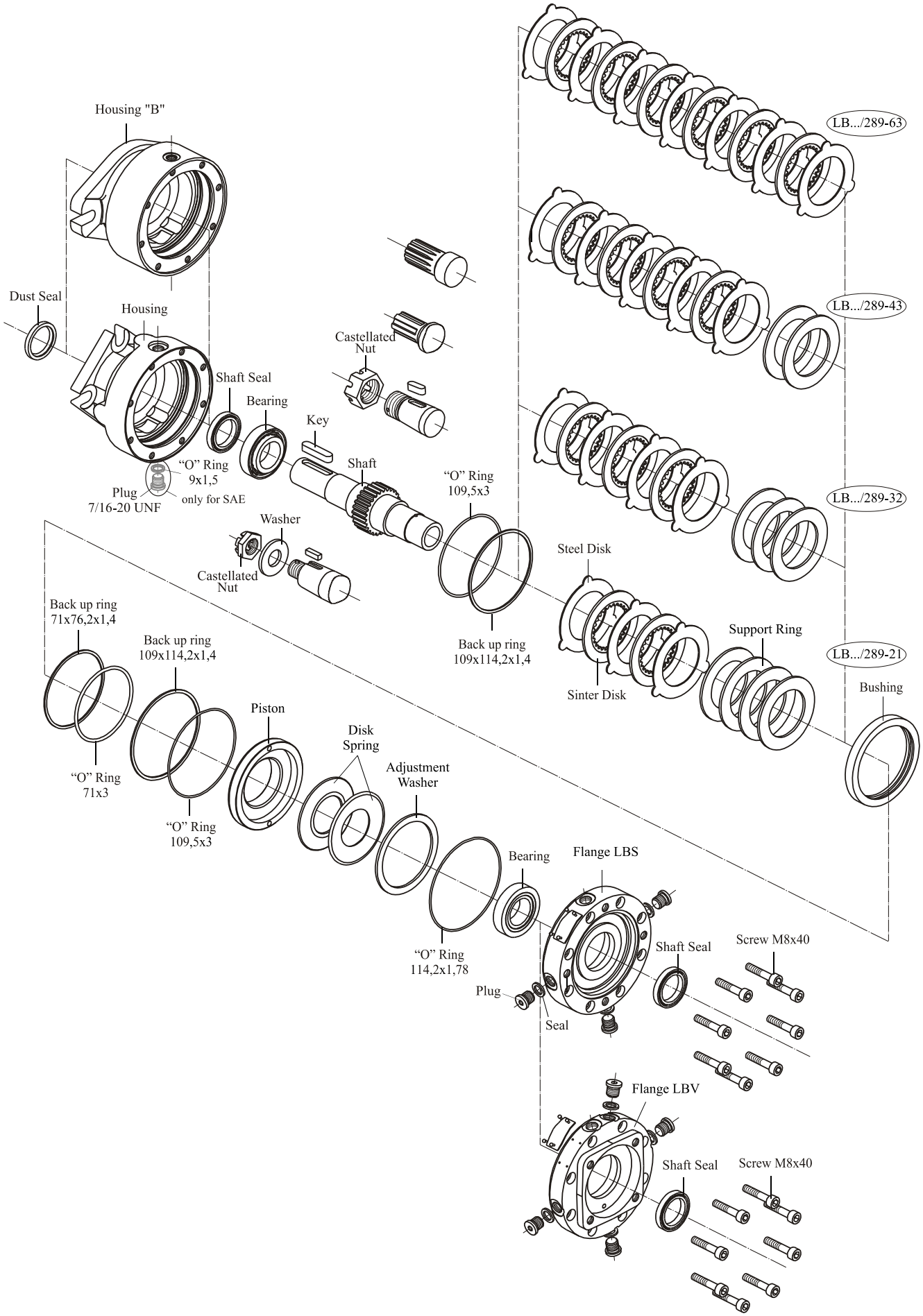
Housing "B"
Dust Seal
Housing
Shaft Seal
Bearing
Key
Castellated Nut
"O" Ring 9x1,5
Plug 7/16-20 UNF
only for SAE
Shaft
"O" Ring 109,5x3
Washer
Castellated Nut
Back up ring 71x76,2x1,4
Back up ring 109x114,2x1,4
Back up ring 109x114,2x1,4
Steel Disk
Sinter Disk
Support Ring
Bushing
LB.../289-63
LB.../289-43
LB.../289-32
LB.../289-21
"O" Ring 71x3
"O" Ring 109,5x3
Piston
Disk Spring
Adjustment Washer
"O" Ring 114,2x1,78
Bearing
Flange LBS
Shaft Seal
Screw M8x40
Plug
Seal
Flange LBV
Shaft Seal
Screw M8x40

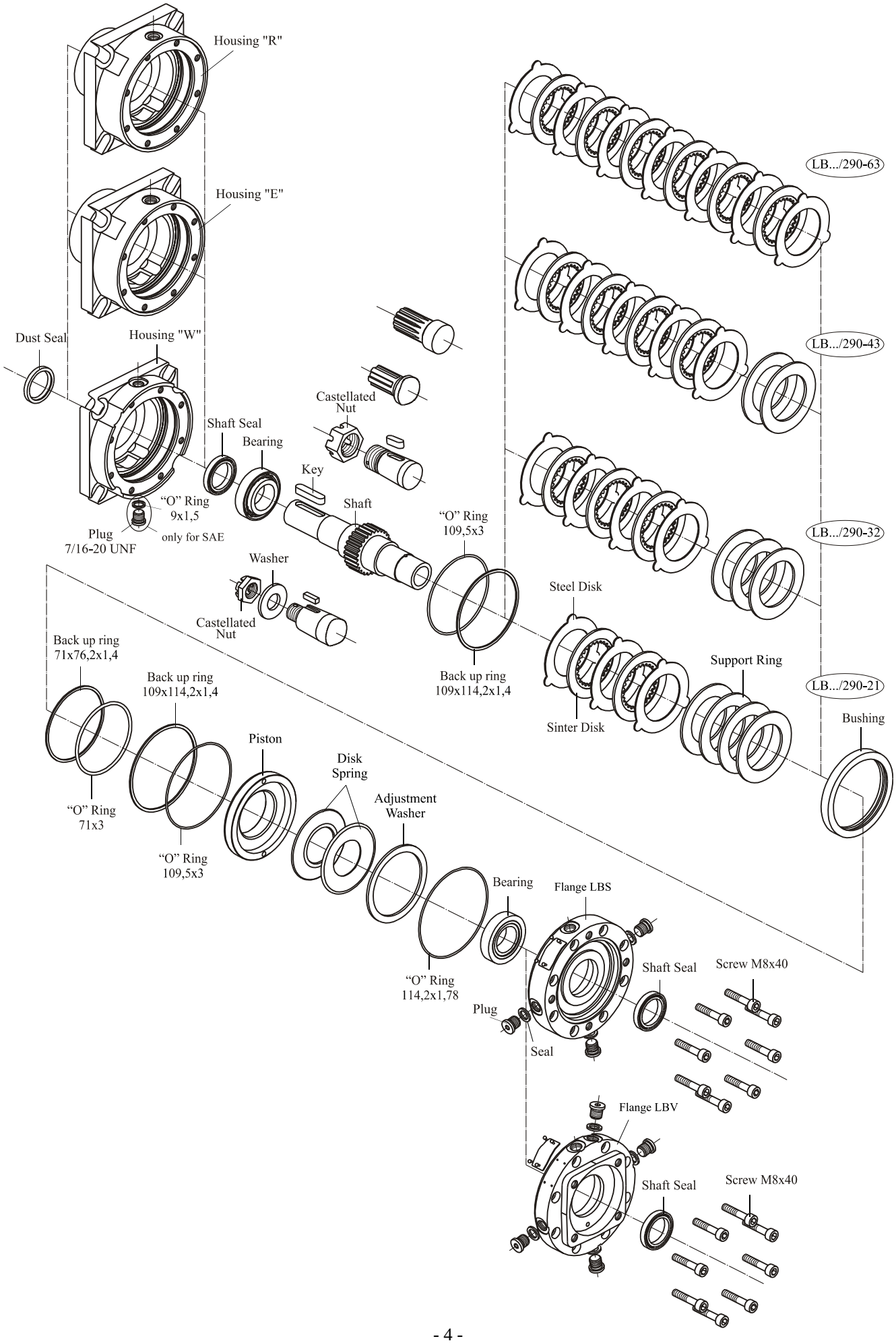
Housing "R"
Housing "E"
Dust Seal
Housing "W"
Shaft Seal
Bearing
Castellated Nut
Key
Shaft
"O" Ring 9x1,5
Plug 7/16-20 UNF
only for SAE
"O" Ring 109,5x3
Washer
Castellated Nut
Back up ring 109x114,2x1,4
Steel Disk
Sinter Disk
Support Ring
Bushing
LB.../290-63
LB.../290-43
LB.../290-32
LB.../290-21
Back up ring 71x76,2x1,4
Back up ring 109x114,2x1,4
"O" Ring 71x3
"O" Ring 109,5x3
Piston
Disk Spring
Adjustment Washer
"O" Ring 114,2x1,78
Bearing
Flange LBS
Shaft Seal
Screw M8x40
Plug
Seal
Flange LBV
Shaft Seal
Screw M8x40

Instructions in this manual are for brakes type LB…

Cleanliness is extremely important when repairing these brakes. Work in clean area!

Before disassembly, drain oil from brake.

If there is castellated nut, washer or key, they have to be removed from the shaft.

Although not all drawings show the brakes in disassembly devise, we recommend that you keep brake clamped during disassembly.

For LBS[V]/289 and LBS[V]/290:

1. Unscrew plugs (3 pcs. for LB/288 and LBS, 4 pcs. for LBV) using S6 Allen head spanner and set them in order aside incl. seals.

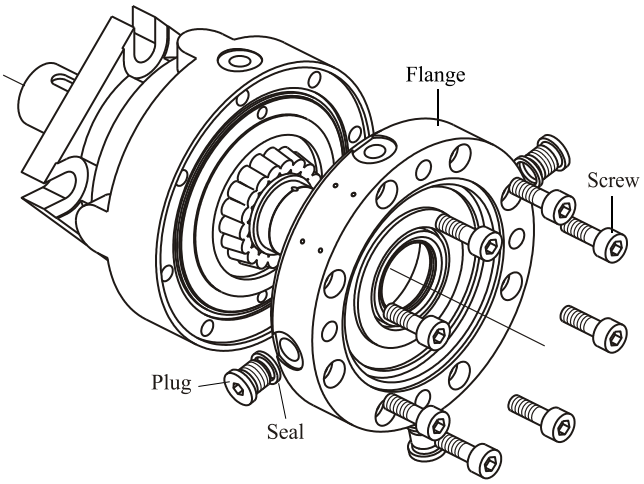

Fig.1

2. Place the brake in disassembly devise (plate with central hole ø83 for LB/288, 289 or ø125 (ø127) for LBS(LBV)/290 with two pins opposite staved into it) with the output shaft directed downwards. Unscrew screws (8 pcs.) using Allen head spanner.

Note: Unscrew the screws uniformly, diametrically, successively to prevent breaking the screw heads in result of the spring pressure.

Remove flange incl. shaft seal and outer rim of bearing (see Fig. 1).

3. Remove from flange shaft seal. Do not dismount outer rim of bearing from flange.

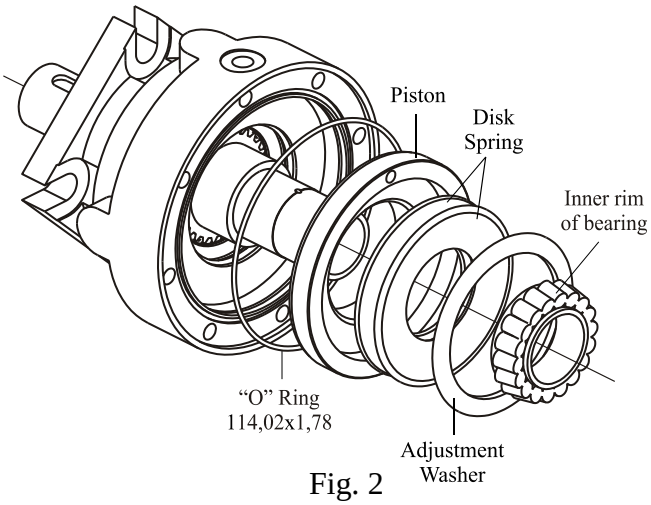

Fig. 2

4. Remove piston from housing. Use special tool with two screws M5x20 screwed in M5 holes to rest in advance and using a puller. Take the O-rings and the Back up rings out of piston and bushing grooves. The piston will come out with inner rim of bearing, adjustment washer and dick springs (see Fig.2).

5. Remove from housing groove O-ring 114,2x1,78.

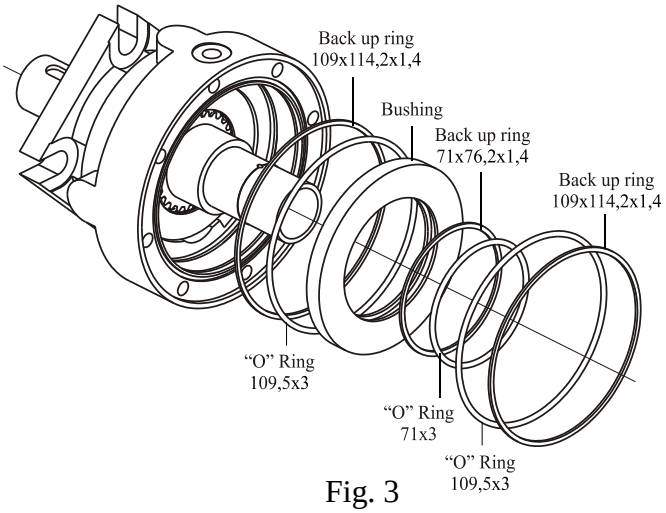

Fig. 3

6. Take the O-ring 109,5x3 and the Back up ring 109x114,2x1,4 out of housing groove (see Fig.3).

7. Remove bushing carefully out of the brake housing using a puller with slight swivelling motions. Remove from bushing groove O-ring 71x3 and Back up ring 71x76,2x1,4.

8. Take the O-ring 109,5x3 and the Back up ring 109x114,2x1,4 out of housing groove (see Fig.3).

9. Remove from housing whole assembly contained shaft, inner rims of front ant rear bearings, steel disks, sinter disks and support rings (see Fig.4). Separate the rims from shaft. Check the friction elements for defects (availability of wearing marks and checking the weight) and replace with new ones.

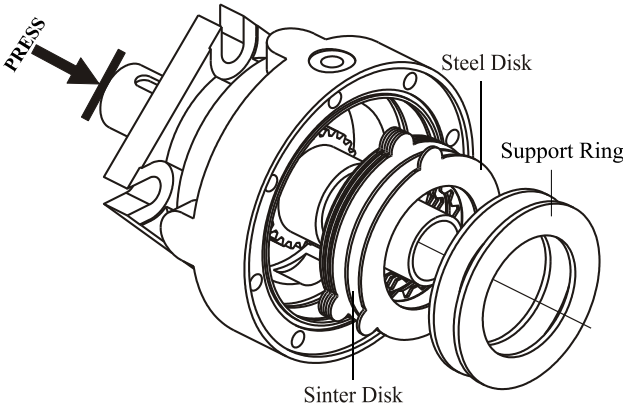

Fig.4

10. With a small screwdriver remove dust seal from housing.

Knock the shaft seal out of housing using a soft bushing and a plastic hammer (see Fig. 5). Do not remove ftom housing outer bearing rim!

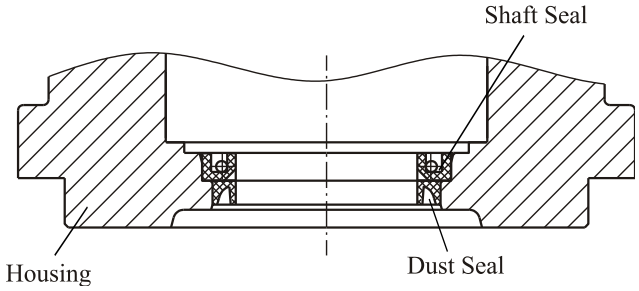

Fig. 5

Seal Kits:

Euro version
SK 41 5127 8032 for LB/288-series 4
SK 41 5127 8000 for LBS[V]/289 and LBS[V]/290 - series 4

SAE version
SK 41 5128 9500 for LB/288 - series 4
SK 41 5128 9544 for LBS/289 and LBS/290 - series 4
SK 41 5128 9619 for LBV/289 and LBV/290 - series 4

1. CLEANING:
Wash all parts (except seals) in a weak solvent on carbon base and then degrease.

2. MEASURING AND REPLACEMENT:
Measure all parts and compare their actual dimensions with the nominal ones given in the technical documentation. Replace any parts with scratches or burrs that could cause leakage or damage with new ones. Use new seals and washers when reassembling the motor.

3. LUBRICATION:
Lubricate all friction parts, which should be reassembled with light film of petroleum jelly.

1. Place lubricated shaft seal (5 bar) in the housing and firmly push with Seal driver (see Fig.6).

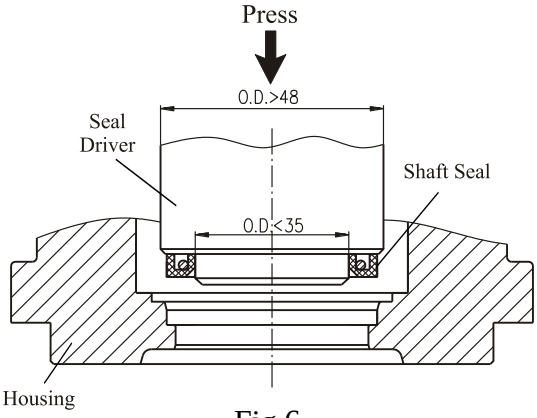

Fig.6

2. If dismounted, stave the outer bearing rim of the front tapered bearing into the housing (with the bigger diameter orientated to the housing) using a bushing made from non-ferrous metal (bronze, brass) and sizes ø55xø61x50 and a 2000daN press. Fix the housing in reassembly devise (plate with an ø83 hole for LBS[V]/289 or ø125 (ø127) for LBS[V]/290 and two pins on ø106).

3. Stave to the rest over the front part of shaft the inner bearing race and the roller retaining ring of the front tapered roller bearing. Use a small press and an ø36xø42x90 bushing. Arrange correct the sinter disks beginning and finishing with the steel disk and engaging the sinter disks inner teeth with the shaft outer teeth. Place support disks over friction pack. See Table 1 for correct number of disks.

Place a slightly oiled safety metal cap (for protecting the shaft seal ring lips) on the assembled shaft. Mount carefully the shaft assembly into the housing to the rest!

ATTENTION: Before mounting grease well each friction dick. The external 3 teeth of all steel disks should coincide with the grooves milled in the housing!

4. Mount lubricated O-ring 109x114,2x1,4 (2 pcs.) with back up ring 109,5x3 (2 pcs.) into housing grooves. (see fig.7)

ATTENTION: Orient O-ring to the arch sector of back-up ring.

9. Mount lubricated O-ring 71x3 with back up ring 71x76,2x1,4 into bushing grooves. (see Fig.7)

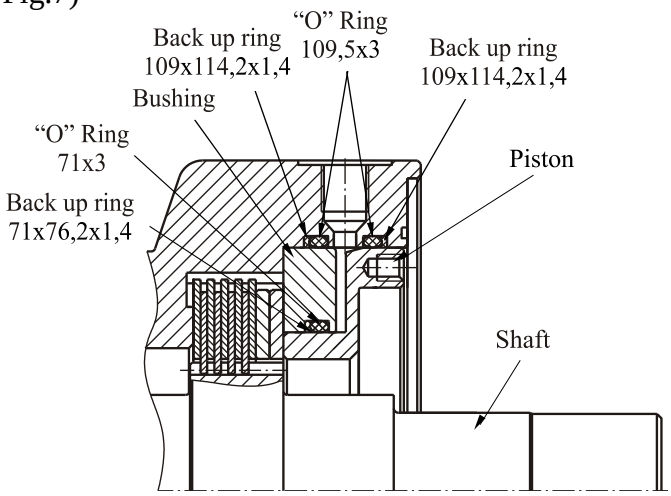

Fig.7

10. Assemble together the lubricated piston and bushing. Mount assembly in brake housing using a hand-power press with guaranteed rectilinear movement.

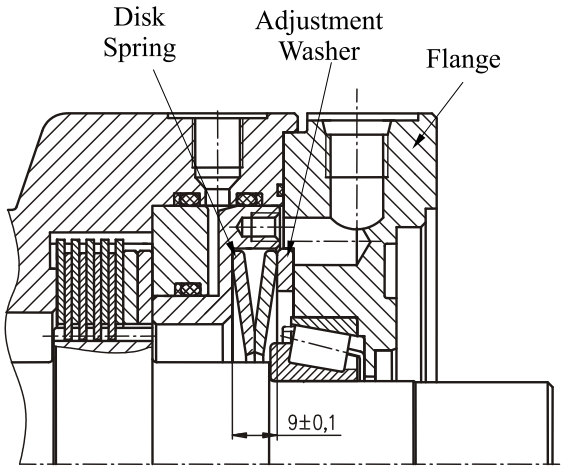

Fig.8

11. Install adjustment washer and disk springs (see Fig. 8).

<u>IMPORTANT!</u> The size of adjustment washer should ensure opening pressure as shown in Table 1 (after mounting of flange the dimension over disk springs should be 9±0,1 mm) (see Fig.8).

12. On rear part of shaft stave the inner bearing race of the rear bearing incl. the roller retaining ring. Outer rim is staved in flange.

13. Lubricate and install O-ring 114,2x1,78 in the housing seal groove.

14. Lubricate slightly the internal surface of the flange and orient it as follows:

- drain port in flange should be rotated 11^0 left of release port in housing (see Fig.1).
- line up the bolt holes of housing and flange.

15. Mount flange to housing with 8 screws M8 and alternately torque them to 2,5÷3,0 daNm using S6 Allen head spanner (see Fig.1).

ATTENTION: The axial clearance between front and rear tapered bearing should be 0,04±0,1 mm. It can be realized by decreasing the flange thickness.

16. Install seal on plug and torque to 2,5÷3,0 daNm using S6 Allen head spanner (see Fig.1). For LBS plugs are 3 pcs. and for LBV – 4 pcs.

17. Lubricate flange seal groove and external surface of shaft. Place lubricated shaft seal (high pressure) in the flange and firmly push with Seal driver.

18. Reposition brake assembly with output shaft up. Lubricate dust seal and install in housing seal groove.

19. Install key in shaft key groove. For cone shafts install washer and screw castellated nut.

Disassembly and reassembly of LB/288:

Follow the same disassembly and reassembly procedures as for LBS[V]/289 and LBS[V]/290 except following:

Disassembly:

1. The plugs are mounted in housing, not in flange.

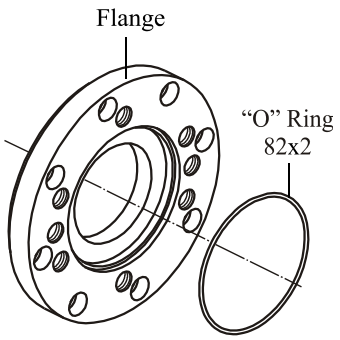

Fig. 9

2. Separate O-ring 82x2 from flange (see Fig.9). There are no rear bearing and shaft seal.

3. After dismounting of piston and bushing turn the brake unit with open side downwards. Shake it slightly on soft surface. Support rings, sinter disks and steel disks will drop out.

4. Reposition brake with output shaft up.

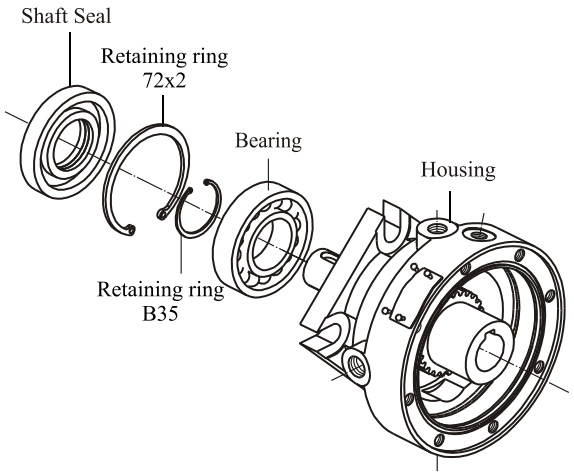

Fig. 10

Remove from housing shaft seal (see Fig.10).

Remove the retaining rings using utility pliers for holes and shaft.

5. Place the brake in disassembly devise (plate with central hole ø83 with two pins opposite staved into it) with the output shaft directed downwards. Separate shaft from housing using a small press. Remove bearing from shaft.

Reassembly:

6. Using a small press and bushing made from non-ferrous metal (bronze, brass) stave to rest the radial bearing over the front part of shaft.

Mount the retaining ring in shaft in front of the bearing (see Fig.10).

7. With a small press sstave the assembled shaft in front part of the housing. Mount the retaining ring in housing (in front of the bearing). Note: The retaining rings are correct mounted when could be rotated over shaft axes.

8. Place a safety cap over the shaft journal to protect the seal lips against breaking. With seal driver stave in the housing shaft seal (see Fig.11).

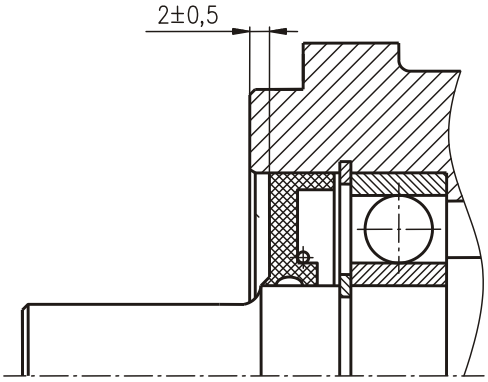

Fig. 11

9. Turn the housing and place it in an assembling fixture (plate with a central hole ø83 and two pins of ø106 diametrically). Arrange the steel and sinter disks successively in the housing along the shaft teeth.

10. After mounting the flange to housing insert lubricated O-ring 82x2 into flange seal groove and place face seal to protect flange surface.

ATTENTION:

1. ** In all brakes, friction disks and separators should be lubricated. Space is filled with 50 ÷ 120 cm^3 mineral oil HLP (DIN 51524) or HM (ISO 6743/4).

2. Hydraulic brake is delivered without oil (it is lubricated only).

** For LB/288 fill oil after hydraulic motor assembly.

Table 1

Brake type	Steel disk	Sinter disk	Support ring	Opening Pressure min	Opening Pressure max	Static torque
				PSI [bar]		in.-lb. [daNm]
LB/288-7	3	2	4	58÷116 [4÷8]	4350 [300]	531÷708 [6÷8]
LB/288-14	3	2	4	116÷232 [8÷16]	4350 [300]	1150÷1327 [13÷15]
LB/288-21 LBS/289-21 LBS/290-21	3	2	4	246÷333 [17÷23]	4350 [300]	1770÷1947 [20÷22]
LB/288-32 LBS/289-32 LBS/290-32	4	3	3	246÷333 [17÷23]	4350 [300]	2743÷3009 [31÷34]
LB/288-43 LBS/289-43 LBS/290-43	5	4	2	246÷333 [17÷23]	4350 [300]	3628÷3982 [41÷45]
LB/288-63 LBS/289-63 LBS/290-63	7	6	-	246÷333 [17÷23]	4350 [300]	5310÷5753 [60÷65]

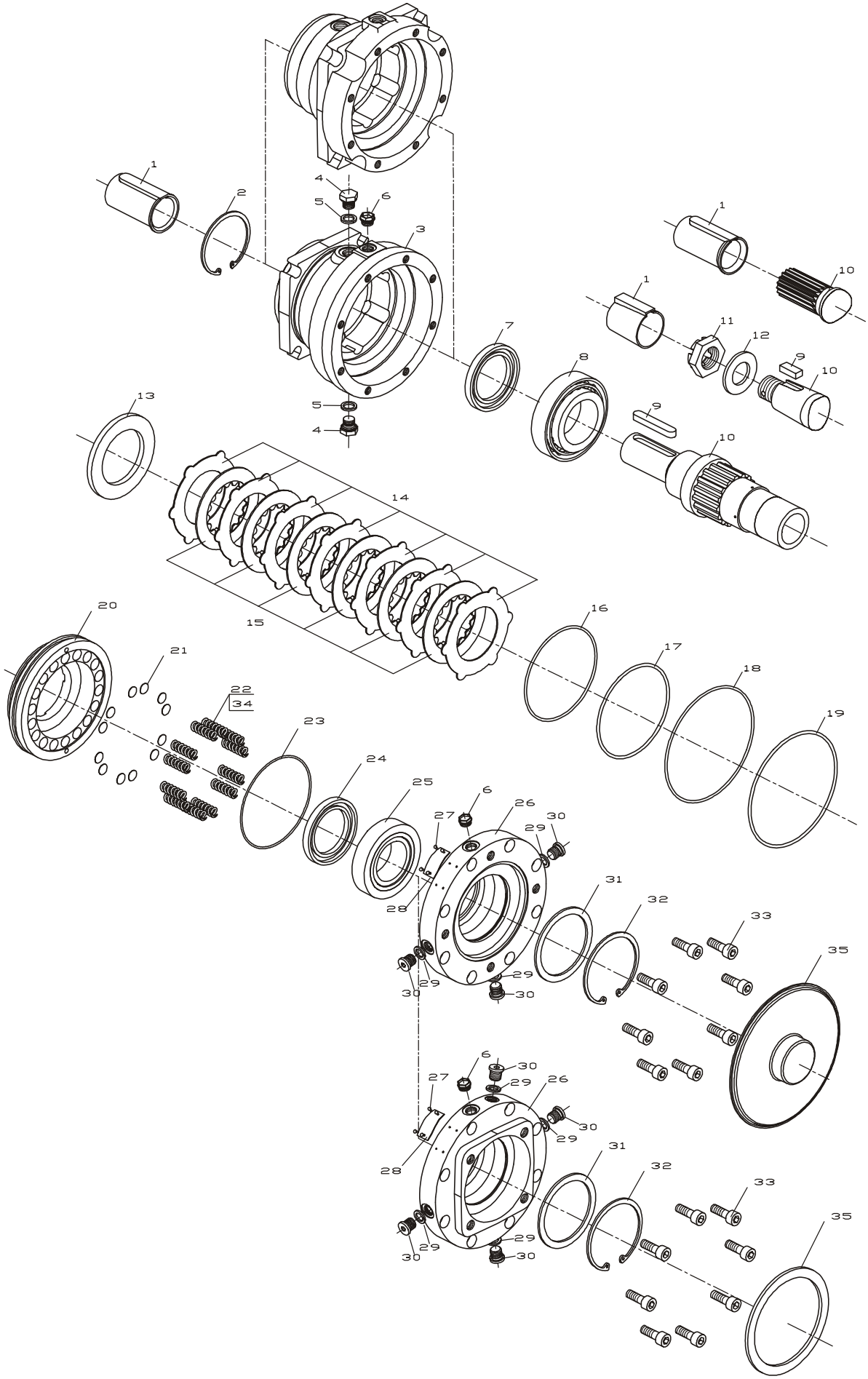
1
2
4
5
6
3
7
8
9
10
11
12
13
14
15
16
17
18
19
20
21
22
34
23
24
25
26
27
28
29
30
31
32
33
35

Item Pos.Nr.	Part to remove Zerlegbare Teile	C o m m e n t s B e s c h r e i b u n g
11	**Castellated Nut** **Kronenmutter**	On tapered shaft motors only. Remove it by S=46 mm socket spanner or unscrew it manually. *** Nur für Motoren mit Keilwellen. Die Mutter mit Hand oder mittels Steckschlüssels S=46 mm lösen.
12	**Washer** **Scheibe**	Take it out along the brake shaft. ******* Entlang der Bremswelle herausnehmen.
9	**Parallel Key** **Paßfeder**	Take it out using a little chisel and a plastic hammer. Knock the parallel key slightly several times (along the brake shaft) on the front side. ******* Mit einem Meißel und Kunststoffhammers die Paßfeder herausschlagen. Auf der Stirnfläche der Paßfeder entlang der Bremsachse schlagen.
6, 4, 30, 5, 29	**Seal Plug G ¼, Plug G $^{3}/_{8}$, Plug G ¼, Washer 17x21, Washer 13x17** **Stopfen G ¼, Stopfen G $^{3}/_{8}$, Stopfen G ¼, Dichtring 17x21, Dichtring 13x17**	Place the brake with the output shaft downwards directed in assembly fixture (plate with central hole ø126 for LBS(LBV)/314 or ø161 for LBS(LBV)/315 with two pins opposite staved into it). Unscrew seal plug using a socket spanner or manually. Plug G $^{3}/_{8}$ is unscrewed by an Allen head spanner S=19 mm; plug G ¼ is screwed by an Allen head spanner S=6 mm. Place parts in order aside. ******* Die Bremse mit der Ausgangswelle nach unten im Haltewerkzeug spannen (Halteplate mit Zentrierbohrung ø126 für LBS(LBV)/314 oder ø161 für LBS(LBV)/315 mit zwei gegenüber eingeschlagenen Stiften). Stopfen G $^{3}/_{8}$ wird mit Steckschlüssel S=19 mm und Stopfen G ¼ mit Steckschlüssel S=17 mm losgeschraubt. Die Teile seitwäts ordnen.
35	**Safety Cap** **Stützkappe**	Remove it manually or by screwdriver. *** Mit Hand oder Schraubenzieher entfernen.
31, 32	**Washer Ring A90,** **Scheibe Ring A90,**	Take out retaining ring using pliers for holes. Remove washer. ******* Den Ring mit Zange für Bohrungen ausziehen. Die Scheibe entfernen.
33	**Screw M10 (8 pcs.)** **Zylinderschrauben M10 (8 St.)**	Unscrew them by a S8 Allen head spanner. **ATTENTION:** Valid for last two screws: unscrew them uniformly, diametrically, successively to avoid breaking the screw heads which can be caused by spring pressure. ******* Die Schrauben mittels Steckschlüssels S=8 mm lösen. **ACHTUNG:** Geltend für die letzten zwei Schrauben: diese langsam, kreuzweise losschrauben, um Zerreißen der Schraubenköpfe infolge Federpresskraft zu vermeiden.
26	**Flange** **Flansch**	Take it out upwards incl.shaft seal ring, item 7 and bearing, item 25 using two screwdrivers. ******* Den Flansch, inkl. Wellendichtring, Pos.7 und Lager, Pos.25 nach oben herausziehen. Dafür zwei Schraubenzieher verwenden.

Item Pos.Nr.	Part to remove Zerlegbare Teile	C o m m e n t s B e s c h r e i b u n g
25	**Bearing** **Lager**	Place the flange on a plate with hole min. ø95 as flange face to be leaned on plate. Knock out the bearing by assembly bushing with external diameter max.ø58 and a plastic hammer from opposite side. ******* Den Flansch auf Platte mit Bohrung min. ø95 stellen, so daß seine Stirnfläche die Platte berührt. Den Lager mit Hülse (Außendiameter max.ø58) und Kunststoffhammer von der Gegenseite ausschlagen.
24	**Shaft Seal** **Wellendichtring**	Knock out the shaft seal ring using a bushing with with external diameter ø 71 and a plastic hammer. ******* Den Wellendichtring mit einer Hülse mit Außendiameter ø 71 und Kunststoffhammer ausschlagen.
23	**O-ring** **O-Ring**	Take it out of its seat in the Flange. ******* Den O-Ring aus seinem Sitz im Flansch herausziehen.
22, 34	**Springs** **Kraftfeder**	Remove the springs consequtively out of their seats in balance plate. ******* Die Feder nacheinander aus Kolben entfernen.
20	**Balance Plate** **Kolben**	Take the balance plate out of brake housing, using two screws M6x20, screwed in advance in M6 holes to rest and using puller. Use slight swivelling motions ******* In der Bohrungen M6 des Kolbens zwei Schrauben M6x20 bis zum Anschlag einschrauben. Den Kolben dann mit Abzieher und leichten Drehebewegungen herausnehmen.
21	**Washers** **Scheiben**	Turn balance plate with spring holes downwards and spring washers will drop out. ******* Den Kolben mit den Federlöchern nach unten kippen, damit die Scheiben herausfallen.
16, 18, 17, 19	**Thrust Ring, O-ring** **Stützring, O-ring**	Take them out of the balance plate housing. *** Die O-Ringe aus den Kolbennuten herausziehen.
10, 14, 15, 13, 8	**Shaft, Sinterdiscs, Lamelles, Locking Bushing, Bearing** **Welle, Sinterlamellen, Lamellen, Rastbuchse, Lager**	Take the complete unit (consisting of shaft, bearing bushing staved on it and roller-retainer ring, 6 pcs. sinterdiscs with internal teeth, 7 pcs. lamelles and locking bushing) out of housing. Pull the bearing out by puller. Order friction elemnts pack aside for testing defects. (availability of wear and weight checking). ******* Die komplette Baugruppe, bestehend aus Welle, Lagerhülse und Lagerkäfig, 6 St.Stirnlamellen, 7 St.Lamellen und Rastbuchse aus Gehäse entfernen. Die Lager mittels Abziehers herausziehen. Die Friktions-elemente auf Verschleiß prüfen und das Gewicht kontrolieren.
3, 7, 2,	**Housing, Shaft Seal Ring, Retaining Ring,**	Place housing with flange upwards on surface.Open retaining ring and take it out by pliers for holes. Pull shaft seal ring out of its seat by bushing and plastic hammer. Dismantling of bearing external race is not allowed.

Item Pos.Nr.	Part to remove Zerlegbare Teile	C o m m e n t s B e s c h r e i b u n g
8	**Bearing**	**ATTENTION:** For absolute effectiveness it is recommended changing of: **A)** all seal elements; **B)** lamelles (7 pcs.) and sinterdiscs (6 pcs.) **C)** springs Item 22 because of material fatigue **D)** washers Item 21 to reach parameters for separtion, engagement and control of static (frictional) moment. *******
	Gehäuse, Wellendichtring, Sicherungsring, Lager	Das Gehäuse mit dem Flansch nach oben kippen. Den Sicherungsring mit einer Spezialzange herausziehen. Den Wellendichtring mit einer Buchse und Kunststoffhammer ausschlagen. Die äußere Laufscheibe nicht demontieren. **ACHTUNG:** Damit die einwandfreie Funktion der Bremse gewährleistet werden kann, empfielt sich die folgenden Teile zu ersetzen: **A)** Dichtungselemente; **B)** Lamellen (7 St.) und Sinterlamellen (6 St.); **C)** Feder, Pos.22 inforlge Materialermüdung; **D)** Scheiben, Pos.21, um die Parameter des Bremseingriffs und -auslösens zu erreichen. Dadurch wird auch das statische (Friktions-) Bremsmoment kontrolliert.

1. CLEANING: All parts (except the seals) should be washed in a weak solvent on carbon base and then degreased.

2. MEASURING AND REPLACEMENT All parts should be measured and the actual dimensions should be compared with the nominal ones given in the technical documentation. Replace worn out parts with new ones. Replace all rubber and plastic parts.

3. LUBRICATION: Lubricate all parts which should be assembled with grease or Vaseline film.

****

1. REINIGEN: Alle Teile (ausser Dichtungen) werden mit einem schwachen Lösungsmittel auf Kohlenstoffbasis gereinigt und entfettet.

2. MESSEN UND AUSWECHSELN: Alle Teile werden gemessen, um ihre Konformität mit den in der technischen Dokumentation genannten Abmessungen zu prüfen. Die Verschleißteile auswechseln. Alle Gummi - und Kunststoffteile ersetzen.

3. SCHMIERUNG: Alle einzubauenden Teile nach der Messung mit einer dünnen Schicht Fett oder technischer Vaseline schmieren.

Item Pos.Nr.	Part to mount Montageteile	Comments Beschreibung
3, 8	**Housing, Bearing Race**	Stave external bearing race on front tapered bearing (with the bigger diameter to the housing cavity) by bushing made from non-ferous metl (bronze, brass) with sizes ø 80x ø94x50 and 2.000 daN press. Place the part with internal cavity upwards on mounting/dismantling plate with hole ø126 (for LBS(LBV)/314) or with hole ø162 (for LBS(LBV)/315) and two pins ø12 (for LBS(LBV)/314) or ø16 (for LBS(LBV)/315). ***
	Gehäuse, Lageraußenring	Mit Hilfe einer Buntmetallbuchse (Bronze, Messing) - ø80xø94x50 und einer Presse 2.000 daN den Lageraußenring des vorderen Kegelrollenlagers (mit dem größeren Durchmessers zur Gehäuseaushölung gerichtet) einschlagen. Den Teil mit der Aushölung nach oben in einer Montageplatte mit Bohrung ø126 (für LBS(LBV)/314) oder ø162 (für LBS(LBV)/315) und zwei Stiften ø12 (für LBS(LBV)/314) oder ø16 (für LBS(LBV)/315) befestigen.
2, 7	**Retainig Ring Shaft Seal (5bar)**	Place retaining ring in housing groove by pliers for holes. Stave the light externlly oiled shaft seal ring in its housing seat (oiled) from the internal housing cavity by bushing and plastic hammer. ***
	Sicherungsring, Wellendichtring	Den Sicherungsring in seinem Platz mit Sonderzange im Gehäuse montieren. Den Wellendichtring (leicht geschmiert) von außen mittels Buchse und Kunststoffhammer in seinem Sitz einschlagen.
10, 8, 13, 14, 15	**Shaft Bearing, Locking Bushing, Lamelles, Sinterdiscs**	Stave the internal bearing race, incl. roller-retainer ring of front tapered bearing to rest. Use 2.000 daN press and bushing ø61xø68x120. Then carefully order locking bushing and lamelles as starting and finishing the pack with steel discs. Internal teeth of sinterdiscs are engaged with external shaft teeth. Place a slightly oiled safety metal cap (for protecting shaft seal ring “lips” Item 7). Stave the shaft carefully in brake housing to rest). **ATTENTION:** External 3 teeth of all 7 metal lamelles should correspond to splined housing grooves! ***
	Welle, Lager, Rastbuchse, Lamellen, Sinterlamellen	Lagerhülse und Lagerkäfig des vorderen Kegelrollenlagers bis zum Anschlag auf der Welle einschlagen. Presse 2.000 daN und Buchse ø61xø68x120 verwenden. Dann die Rasrbuchse und die Lamellen montiere, indem die Reihenfolge der Lamellenmontage einhalten (die Innenzähne der Sinterlamellen greifen in den Außenzähnen der Welle). Auf den Wellenzapfen Schützkappe (leicht geschmiert) legen, um die Lippen der Dichtung, Pos.7 vom Brechen zu schützen. Die Welle vorsichtig bis zum Anschlag im Gehäuse einbringen. **ACHTUNG:** Die 3 Außenzähne der sieben Stahllamellen sollen mit den gefrästen Nuten in Eingriff sein!
16, 18, 17, 19	**O-rings, Thrust Rings**,	Assemble consequtively well oiled O-rings and thrust rings. O-rings should fit well in well oiled arc-shaped parts of thrust rings. Place them in grooves from their external face of balance plate. ***

Item Pos.Nr.	Part to mount Montageteile	C o m m e n t s B e s c h r e i b u n g
	O-Ringe, Stützring	Die geschmierten O-Ringe und den Stützring in den Kolbennuten nacheinander einbauen. Die O-Ringe gehen in den bogenförmigen Bereich des Stützrings hinein. Die Stützringe in den Nuten von der Fase her montieren.
20	**Balance Plate** **Kolben**	Slightly oil housing cylindrical and balance plate surfaces. Insert balance plate with rings in housing by carefully knocking. ******* Die Zylinderflächen im Gehäuse und Kolben schmieren und den Kolben mit den bereits eingebauten Dichtungen leicht schlagend im Gehüuse einbringen.
21, 22	**Washers, Springs** **Scheibe, Feder**	Assemble the necessary number of springs to reach a static (frictional) moment access, (see Application 1.) **ATTENTION:** Washers with width 0,3; 0,5 and 0,8 (Item 21) are assembled only if the static (frictional) moment and pressure of separation are lower than the pointed out in Application 1. ******* Im Kolben die gewünschte Zahl Feder (um das statische Bremsmoment zu erreichen) hineinbringen, Anhang 1. **ACHTUNG:** Die Scheiben, Pos.21 (Breite 0.3, 0,5 und 0.8 mm dann montieren, wenn das Bremsmoment und die Öffnungs- und Schleßdruck niedriger als die im Anhang 1 angegebenen !
23, 26, 24, 33	**O-ring, Flange, Shaft Seal Ring, Screwes M10**	Place the O-ring (oiled in advance) in flange slot. Stave shaft seal ring to rest into the internal flange socket using a relevant bushing or plastic hammer. (External surface of shaft seal ringand flange socket are oiled in advance). Orient flange with rivet holes towards the name plate, Item 28 to the axis of assembling possition and the inlet port of the brakes. The four holes have to be positioned at 11^0 left to it. Screw the eight screws into the holes uniformly, diametrically and consequtively by a socket wrench with tightening torque of 6 ÷ 6,5 daNm. *******
	O-Ring, Flansch, Wellendichtring, Schrauben M10	Den vorgeschmierten O-Ring in Flanschnute einbringen. Im inneren Sitz des Flansches den Wellendichtring mittels Buchse und Kunststofhammer bis zum Anschlag einschlagen. Wellendichtring und Sitz vorschmieren. Den Flansch wie folgt orientieren: zu den Typenschildlöchern (Pos.28). Die 4 Bohrungen befinden sich in 11° links vom Flansch gegenüber die Montageposition und Zufuhrleitung der Bremse. Dann die 8 St.Schrauben gleichmäßig kreuzweise mit Steckschlüssel S=8 mm und Anzugsmoment 6 ÷ 6,5 daNm festziehen.
25, 31, 32	**Bearing, Washer, Ring A90**	Mount on shaft the bearing internal ring with separator by bushing ø65xø56 and hammer to rest. Stave the external bearing ring in flange hole by bushing ø 88 x ø 78. Place a regulating washer on the bearing and then place the ring A90 in flange groove using pliers for safety rings. Check the bearing axial clearance by movement the shaft into its end position usin a measuring device (clearance recommended 0,004 ÷ 0,10 mm).

Item Pos.Nr.	Part to mount Montageteile	C o m m e n t s B e s c h r e i b u n g
		ATTENTION: Technological assembly should be made in first brake mounting and when setting the real bearing axial clerance as follows: Insted of regulating washer, put an assembly one by which bearing clearance is measured; in this way it is defined the real thickness of regulating washer. Dismantle the assemby washer and finally place the corresponding washer *******
	Lager, Scheibe, RingA90	Lagerhülse und Lagerkäfig bis zum Anschlag mittels Buchse ø65xø56 auf Welle einschlagen. Den Außendichtring des Lagers in der Flanschbohrung mit Buchse ø88xø78 einschlagen. Die Scheibe auf Lager einlegen; den Ring A90 mit Sonderzangen in Flanschnuten montieren. Durch Vor- und Rücklauf der Welle in Endlagen den Axialspiel in den Lagern (Istwert 0,04 ÷ 0,10 mm) durch Messuhr prüfen. **ACHTUNG:** Bei Erstmontage der Bremse und wenn Ist-Axialspiel der Lager festzustellen ist, technilogischer Zusammenbau ausführen, uzw.: anstatt der Einstellscheibe, Montagescheibe für Lageraxialspiel einbringen und die eigentliche Dicke der Scheibe feststellen. Die Montagescheibe ausbauen und die jeweilig bestimmte Einstellscheibe montieren
5, 29, 4, 6, 30	**Washer, Seal Plugs, Plugs**	Place washers into the relevant housing and flange holes and screw seal plugs as follows: 2 pcs. G $^{3}/_{8}$ - use S=19 mm socket spanner and torque 2,5÷3 daNm; 3 pcs. G ¼ (4 pcs. for LBV/...) Allen head spanner S=6 mm and torque 2÷2,3 daNm. Screw 2 pcs.seal plugs manually. *******
	Scheibe, Stopfen	Die Scheiben in den entsprechenden Gehäuse- und Flanschbohrungen einbringen und die Stopfen anziehen: 2 St. G $^{3}/_{8}$ - mit Steckschlüssel S=19 mm und Anzugsmoment 2,5÷3 daNm; 3 St.G ¼ (4 St. für LBV/...) - mit Steckschlüssel S=6 mm und Anzugsmoment 2÷2,3 daNm. Die zwei Stopfen mit Hand festziehen.
9	**Parallel Key**	Place it on shaf by knocking with plastic hammer. *******
	Paßfeder	Die Paßfeder mit Kunststoffhammer auf Welle einsschlagen.
1, 35	**Safety cap**	Mount them on spigot ends *******
	Schützkappe	An Wellenzapfen montieren.

Appendix 1
Anhang 1

Brake Bremse	**Spring/Feder item/Pos.22 pcs./St.**	**Spring/Feder item/Pos.34 pcs./St.**	**Opening Pressure* Öffnungsdruck***		**Static torque Statisches Drehmoment**
			min	**max**	
	59113 604 00	**59113 605 00**	**bar**		**daNm**
LBS(LBV)/… - 21	-	9	4÷5	300	18÷23
LBS(LBV)/… - 29	-	12	6÷7	300	28÷33
LBS(LBV)/… - 43	6	-	9÷10	300	42÷46
LBS(LBV)/… - 65	9	-	13÷15	300	61÷70
LBS(LBV)/… - 85	12	-	18÷20	300	83÷92
LBS(LBV)/… - 110	15	-	20÷25	300	108÷118
LBS(LBV)/… - 130	18	-	27÷29	300	126÷136
* These values indicate the differences between brake inlet pressure and drainage cavities pressure. Diese Werte bezeichnen die Differenzen zwischen Zufuhrdruck der Bremse und Dränageräumen.					

ATTENTION:

1. In all brakes, friction discs and separators should be lubricated. Space is filled with 150 ÷ 300 cm^3 mineral oil HLP (DIN 51524) or HM (ISO 6743/4).
2. Hydraulic brake is delivered without oil (it is lubricated only).

ACHTUNG:

1. Für einwandfreie Funktion aller Bremsen sind die Reibscheiben und Lamellen zu schmieren. Den Raum mit 150 ÷ 300 cm^3 Mineralöl HLP (DIN 51524) or HM (ISO 6743/4) füllen.
2. Die Bremse wird ohne Oil geliefert.